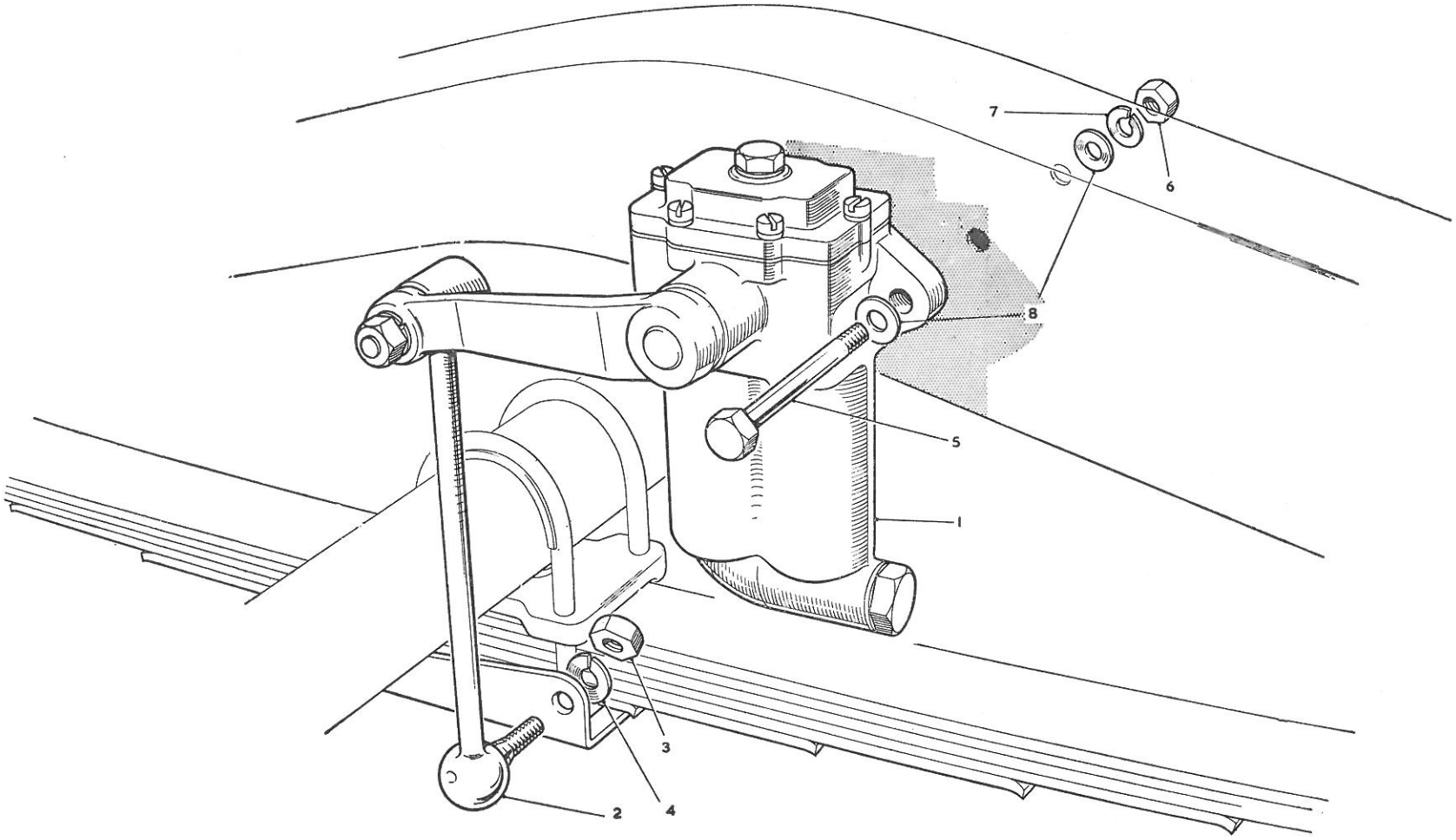

A2140

Item No.	DESCRIPTION	Commencing (C) 501 Part Number	Commencing (C) 501 Illus. No.	Qty. per Veh.	MODIFICATIONS New Part Number	MODIFICATIONS Change Point	REMARKS
	SHOCK ABSORBERS						
1	**Shock Absorber—front**						See section K
2	**Shock absorber—rear R/H**	**AHH5029**		1			
3	**Shock absorber—rear L/H**	**AHH5030**	1	1			
4	Link—shock absorber	97H2031	2	2			
5	Nut—link to bracket	FNZ108	3	2			
6	Washer for nut (spring)	LWN208	4	2			
7	Bolt—shock absorber to frame	HBZ0728	5	4			
8	Nut for bolt	FNZ107	6	4			
9	Washer for nut (spring)	LWZ207	7	4			
10	Washer for nut (plain)	PWZ107	8	8			